Enzyme-Based Technologies for Milling Grains and Producing Biobased Products and Fuels

United States Department of Agriculture

Agricultural Research Service

David B. Johnston, Ph.D.
Lead Scientist

Eastern Regional Research Center
600 East Mermaid Lane
Wyndmoor, PA 19038

Voice: 215-836-3756
Fax: 215-233-6406
David.Johnston@ars.usda.gov

Objective:

The objective of this research project is to develop new, cost effective, alternative methods and engineering processes for **corn processing** and **fractionation** using **enzymes**, immobilized enzymes and other environmentally sustainable processes that maximize the yields of products and **co-products** (starch, protein, ethanol, oil, and fiber) and increase co-product market diversity and value while eliminating hazardous processing aids, such as sulfites.

Approach:

This project was conceived and developed from the concept of taking a new approach to existing processes with the connecting element being **enzymatic application**. Many of the milling processes currently in use have been done in a similar fashion for over 100 years. By carefully reexamining what we know and don't know, and what works and what still has room for improvement we can use this to guide research towards beneficial modifications of existing processes and invent completely new design concepts. The experimentation for this project is constructed to cover fundamental research through design and economic assessment. Scale-up studies are incorporated into the plan where appropriate demonstration efforts and material are required. **Process modeling** and **cost analysis** are critical elements that are incorporated throughout the project design and are intended to aid in the overall process evaluation and to help identify potential problems early in experimentation.

Wet Milling Co-products

ERRC

Dry Grind Process Model for Ethanol Using Corn

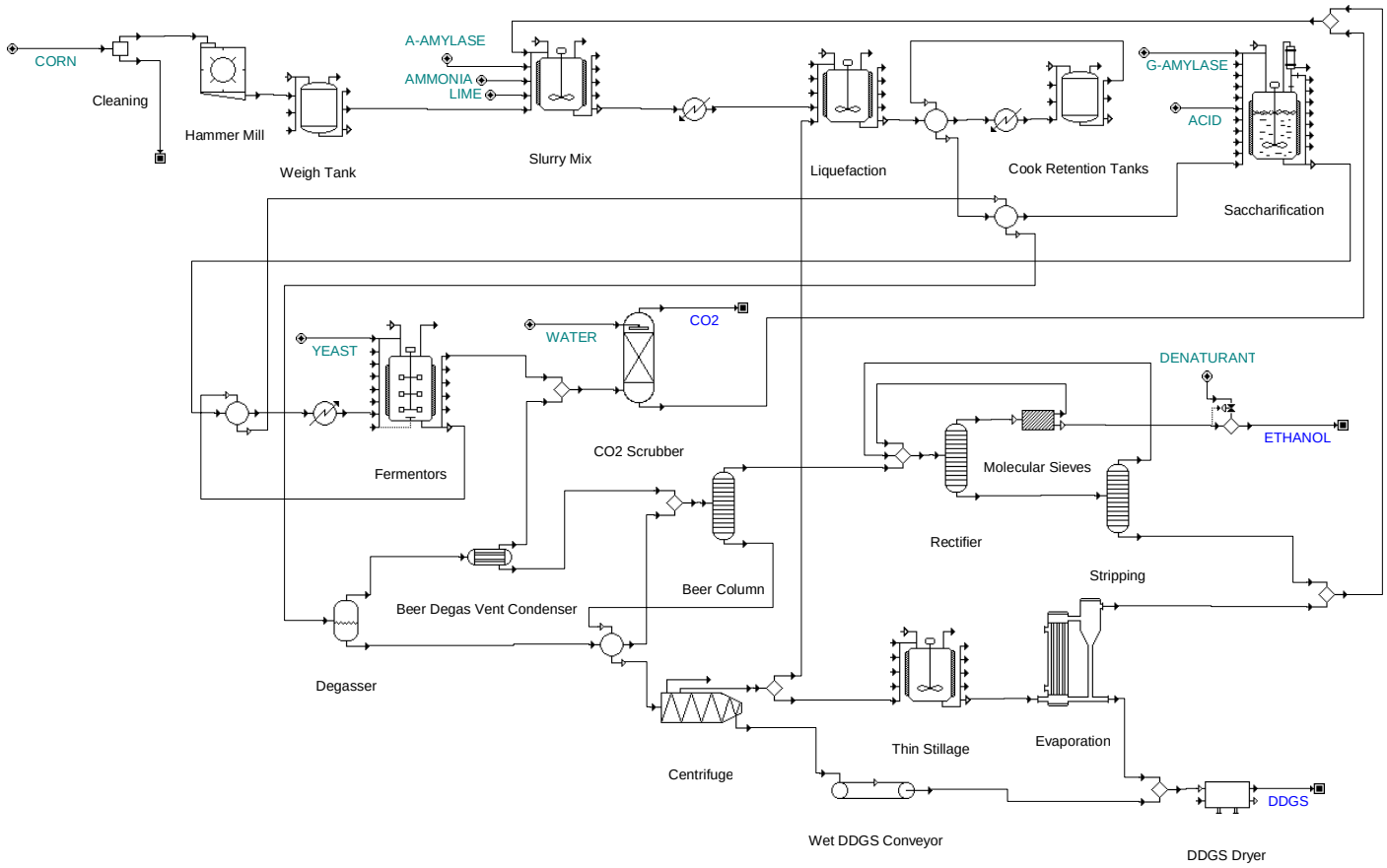

Conventional Corn Wet Milling Process

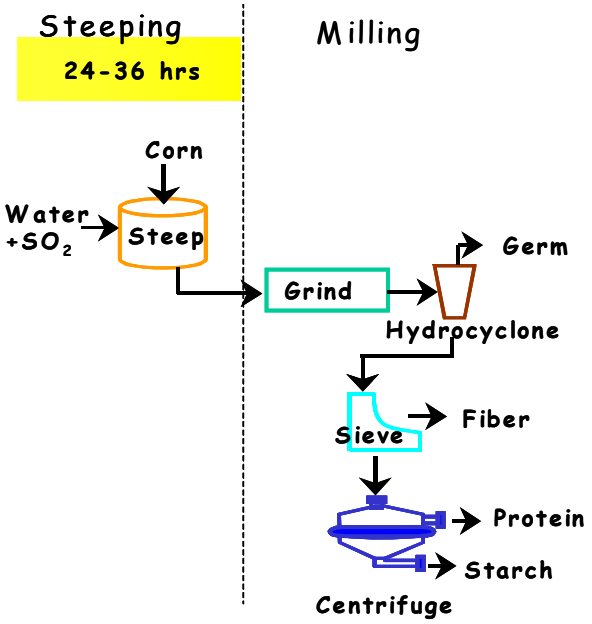

Enzymatic Corn Wet Milling Process

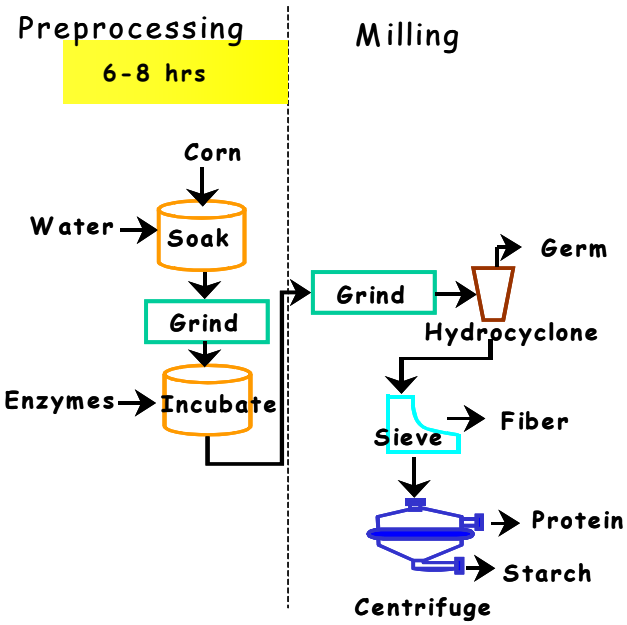

US Patent # 6,566,125